FISCHER PROFIL

A Tata Steel Enterprise

FischerTHERM plusdach roof

The sandwich element with the special something

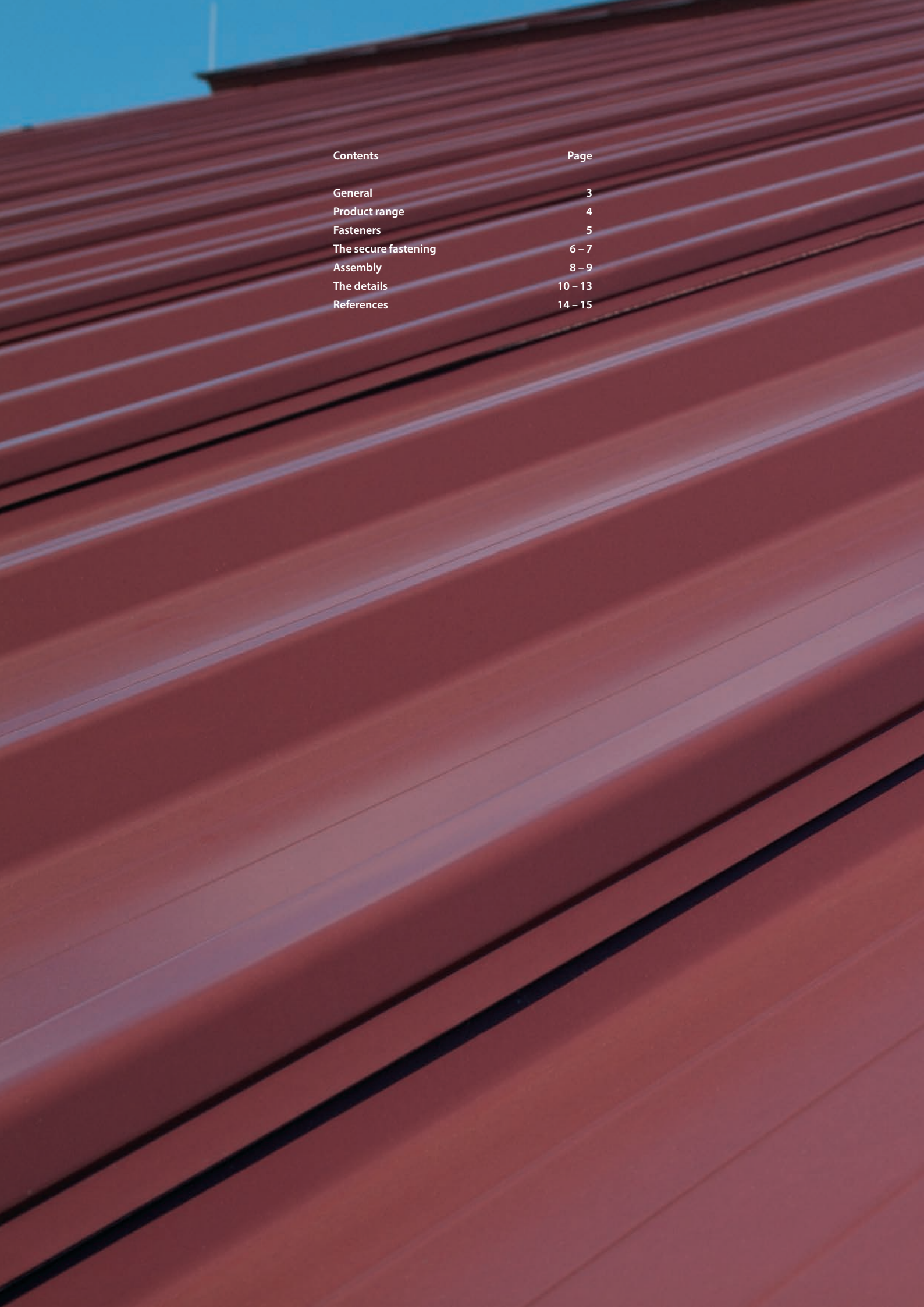

Contents	Page

FischerTHERM plusdach – the first-class roof element

When visible self-sealing screws are undesirable with FischerTHERM roof elements, the FischerTHERM plusdach roof is the logical alternative.
The FischerTHERM plusdach consists of the roof element, the Fischer plus rail and the necessary Type 41-50 spherical caps with aluminum-zinc coating. The Fischer plus rail is securely and permanently attached by simply clipping it over the spherical cap from the side.
This combines the many positive features of the FischerTHERM roof elements with the additional aesthetics of the concealed self-sealing screws.
The self-sealing screws used for attachment of the roof elements to the crown in the area of the purlins are fitted with spherical caps, and for the longitudinal joints at intervals of ≤ 750 mm.
The Fischer plus rail is supplied with exactly the same surface finish as the corresponding outer skin of the FischerTHERM roof elements. The Fischer plus rail has a sheet metal thickness of 0.75 mm and a weight of 0.69 kg/m. Standard length 5000 mm.
A FischerTHERM plus roof can even be created later by retrofitting Fischer plus rails and spherical caps.

Double protection

As the Fischer plus rail can be additionally installed on the FischerTHERM roof elements proven in over 6 million square meters, if offers double protection against possible leaks. Even without the Fischer plus rail, the roof system offers a high degree of protection against rainwater.
The Fischer plus rail can be fitted not only in the area of the longitudinal joint, but also on the two intermediate ribs of the roof elements. This is particularly important for the edge and corner areas with high wind suction loads. Here again, the self-sealing screws are concealed under the Fischer plus rail.

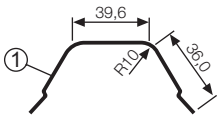

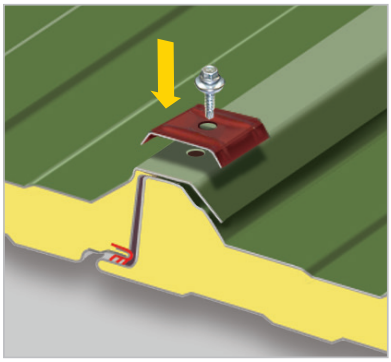

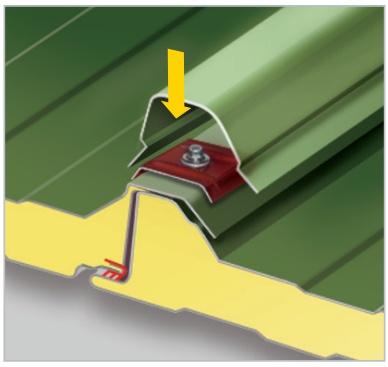

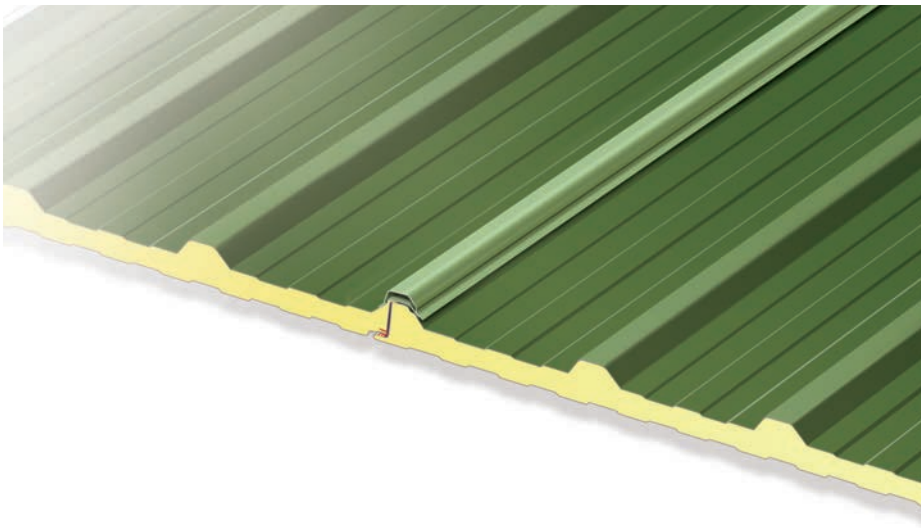

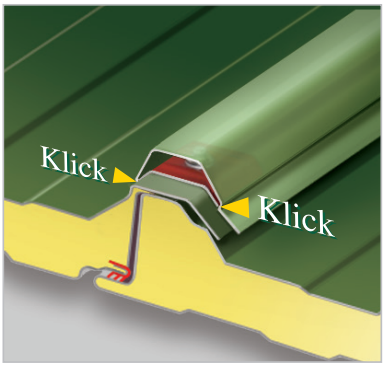

FischerTHERM plusdach – the product range

Roof elements

FischerTHERM D
70, 80, 100, 120, 140, 160, 180

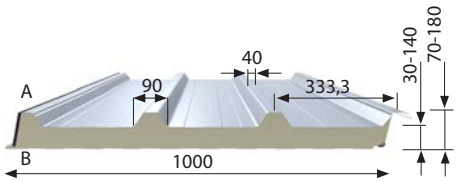

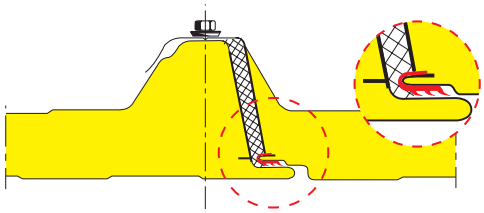

A = Outside B = Inside

The soft joint sealing strip with the additional EPDM sealing profile (DUO seal) guarantees that FischerTHERM roof and wall elements are extremely airtight and offer good thermal insulation.

Table 1: FischerTHERM plusdach – the product range

	Designation	Sheet metal thickness t [mm] Outer skin ta [mm]	Sheet metal thickness t [mm] Inner skin ti [mm]	Element thickness d [mm]	Element length max. L [m]	Element weight g [kg/m²]	$U_{d,s}$ Heat transmission coefficient [1)] W/(m²K)	$U_{n,s}$ to DIN 14509 (without joint) W/(m²K)	R_{tot} Total heat transfer resistance [2)] (m² K)/W
FischerTHERM D 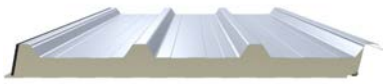	D 70	0.55	0.45	70	26.5	10.5	0.698	0.661	1.5
	D 80	0.55	0.45	80	26.5	10.9	0.536	0.513	1.9
	D 100	0.55	0.45	100	26.5	11.7	0.366	0.355	2.8
	D 120	0.55	0.45	120	26.5	12.5	0.278	0.271	3.7
	D 140	0.55	0.45	140	26.5	13.4	0.224	0.219	4.6
	D 160	0.55	0.50	160	26.5	13.9	0.188	0.184	5.4
	DL 180	0.55	0.50	180	26.5	15.1	0.162	0.159	6.3

1.) $U_{d,s}$ to DIN EN 14509 - simplified method with f_{joint}
2.) to DIN EN 6946 (without joint)

Fasteners

	Roof elements					
Substructure	FischerTHERM DL					
	70	80	100	120	140	160
	Corrosion-proof stainless steel screws					
Steel and reinforced concrete substructure with steel inlay ≥	JZ3-6.3 x 90 -E 16 incl. spherical cap Type 41-50	JZ3-6.3 x 100 -E 16 incl. spherical cap Type 41-50	JZ3-6.3 x 125 -E 16 incl. spherical cap Type 41-50	JZ3-6.3 x 150 -E 16 incl. spherical cap Type 41-50	JZ3-6.3 x 175 -E 16 incl. spherical cap Type 41-50	JZ3-6.3 x 200 -E 16 incl. spherical cap Type 41-50
Wood	JA3-6.5 x 150 -E 16 incl. spherical cap Type 41-50	JA3-6.5 x 150 -E 16 incl. spherical cap Type 41-50	JA3-6.5 x 175 -E 16 incl. spherical cap Type 41-50	JA3-6.5 x 200 -E 16 incl. spherical cap Type 41-50	JA3-6.5 x 230 -E 16 incl. spherical cap Type 41-50	JA3-6.5 x 230 -E 16 incl. spherical cap Type 41-50
Longitudinal joint	JT3-2H-5.5 x 25 -E 16 incl. spherical cap Type 41-50 (Spacing max. 750 mm)	JT3-2H-5.5 x 25 -E 16 incl. spherical cap Type 41-50 (Spacing max. 750 mm)	JT3-2H-5.5 x 25 -E 16 incl. spherical cap Type 41-50 (Spacing max. 750 mm)	JT3-2H-5.5 x 25 -E 16 incl. spherical cap Type 41-50 (Spacing max. 750 mm)	JT3-2H-5.5 x 25 -E 16 incl. spherical cap Type 41-50 (Spacing max. 750 mm)	JT3-2H-5.5 x 25 -E 16 incl. spherical cap Type 41-50 (Spacing max. 750 mm)
Flashings	JT3-3H-5.5 x 25-E16 self-tapping screw (≤ 2 mm substructure) or Al/E 4.8 x 8.3 blind rivet (clamping range 0.8-3.2 mm), distance max. 500 mm (Al sleeve, stainless steel mandrel)					

Only fasteners in accordance with approval notice IFBS Z 14.4 - 407 may be used.
Further screw types, see "Flashings and accessories"

FischerTHERM plusdach – the secure fastening

The secure fastening

Fischer plus rail on longitudinal joint

Position spherical caps in the middle of the crown ribs.

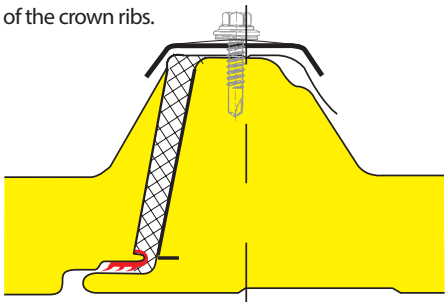

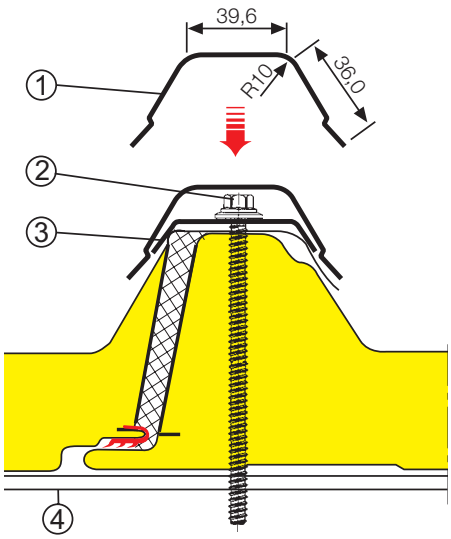

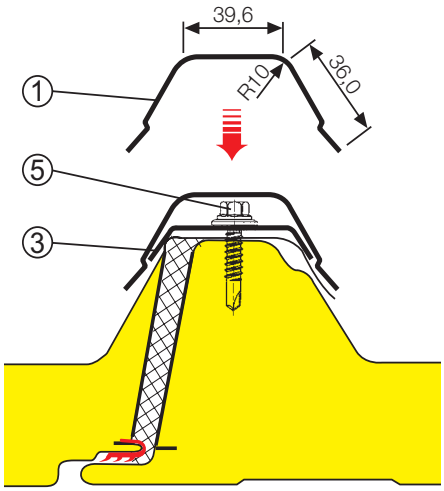

Fischer plus rail on the intermediate ribs

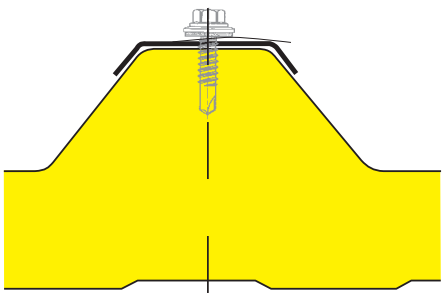

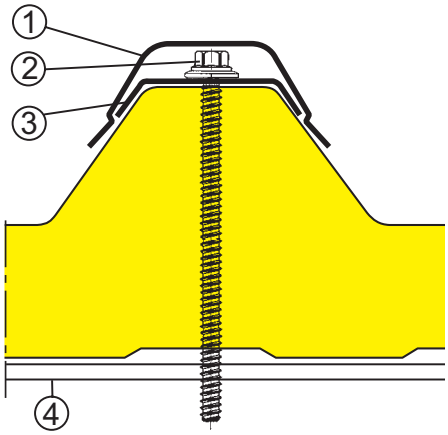

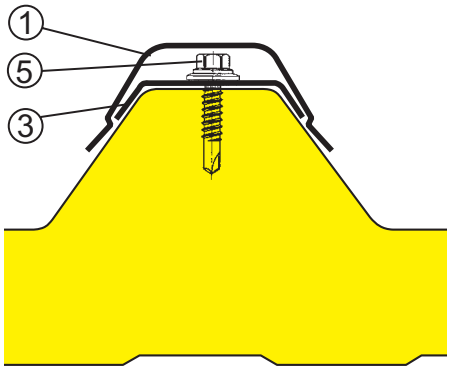

Fischer plus rail, self-tapping screw with spherical cap every ≤ 750 mm between the purlins

1 Fischer plus rail
2 Self-sealing screw 6.3 x ... E 16
3 Spherical cap 41-50 (aluminum-zinc coated)
4 Purlin
5 Self-tapping screw 5.5 x 25-E16

Example of element fastening on FischerTHERM plusdach roof

The examples show possible fastener arrangements, but are no substitute for a structural analysis of the joints.

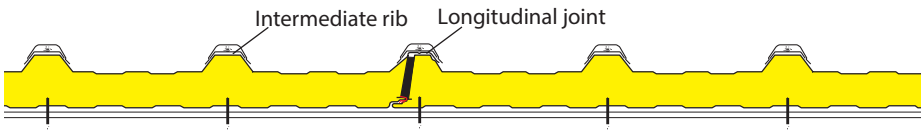

In the longitudinal joint area and on each intermediate rib: 1 self-sealing screw and 1 spherical cap per purlin support

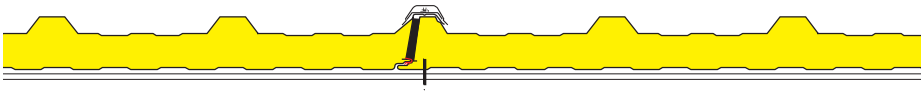

In the longitudinal joint area only:
1 self-sealing screw and 1 spherical cap per purlin support

2 self-sealing screws and 2 spherical caps

Distance e = 60 mm

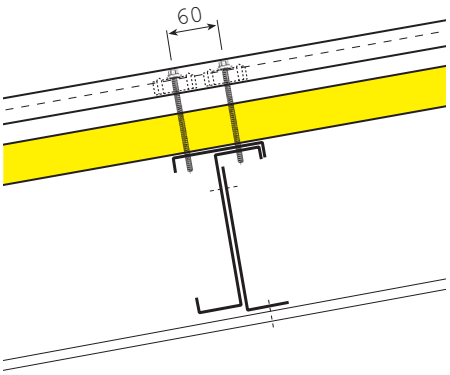

Cantilever of the Fischer plus rail

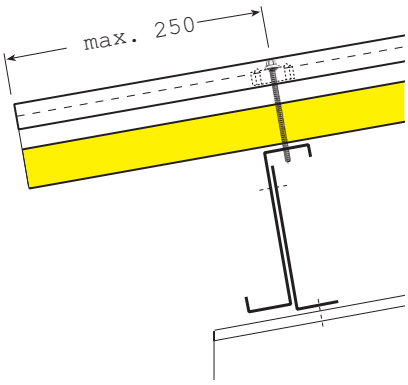

FischerTHERM plusdach – assembly

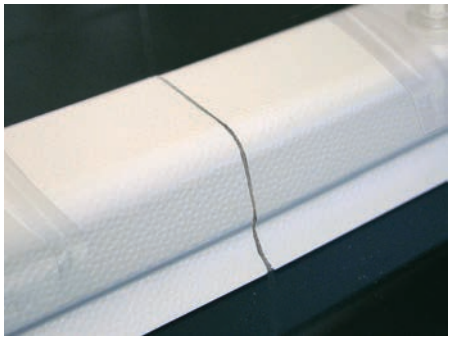

Fischer plus rail, butt joint

Butt joint or overlapping?

These are two possible methods of fitting the Fischer plus rail on the spherical caps.
The FischerTHERM plusdach roof can be used and is water-tight even without the additional Fischer plus rail. The butt joint is the simplest and best solution as there are no special technical details to observe, such as connection to the ridge or eaves, when installing.
The actual butt joint is always close to a spherical cap at a distance of 100 mm from the end of the rail. The few drops of water that could penetrate through the small butt joint shouldn't be a problem.
However, if the roof has a low eaves height or if the eaves can be easily seen due to a large roof pitch, the end flashing of the eaves should be fitted over the Fischer plus rail for optical reasons
(see detail on page 10).

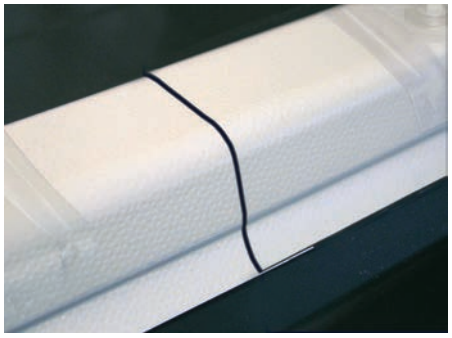

Fischer plus rail, overlapping

The FischerTHERM plusdach roof can also be designed with an overlapping Fischer plus rail.
Here the Fischer plus rails are overlapped by about 30 mm at the joint and clipped onto the spherical caps. Spacers are then used so that the higher edge profiles overlap the Fischer plus rail, such as at the ridge
(see details on page 11).

Assembly

The FischerTHERM plusdach roof can be assembled quickly and easily. Self-sealing screws with spherical caps are attached to the crown of the FischerTHERM roof elements for clip fastening of the Fischer plus rail. In order to facilitate alignment of the spherical caps, these are first measured out and positioned in the gable verge area of the roof surface. A piece of cord can then be used to achieve a uniform distance between the remaining spherical caps.

Self-tapping screws are used at intervals of ≤ 750 mm at the longitudinal joint of the roof elements. If additional self-sealing screws are used in the purlins through the intermediate ribs of the roof elements, for example in the gable verge area due to the high wind suction loads there, the distance between the spherical caps between them will also be ≤ 750 mm.

Finally the Fischer plus rail is fitted over the installed spherical caps and pressed on firmly with your foot so that they engage noticeably and are thus securely clipped onto the spherical cap.

FischerTHERM plusdach – the details

Butt joint

The possible non-binding solutions illustrated here have been designed in such a way that the connections are as cost-effective, easy to install, rainproof, airtight, visually attractive and durable as possible. The German regulation on energy saving in buildings and building systems (EnEV) states that the thermal bridge effects of connection details must be taken into consideration when calculating the U value.

1 FischerTHERM plusdach
2 FischerTHERM
3 Verge capping
4 Angle support
5 Purlin
6 Bracket
7 Rail
8 Bracket
9 Z-profile
10 Self-sealing screw 6.3 x ... - E 16
11 Self-tapping screw 5.5 x ... - E 16
12 Al/E blind rivet - Ø 4.8 x 8.3
13 PUR-M assembly foam (dampen the ends of the elements)
14 Self-sealing screw 6.3 x ... - E 16
15 Permanently elastic strip seal, self-adhesive on one side, illac 20 x 4
16 Spherical cap 41-50 (aluminum-zinc coated)
17 Fischer plus rail
18 Al/E blind rivet - Ø 4.8 x 8.3
19 Permanently elastic precompressed strip seal, self-adhesive on one side, illmod SFI 30 x 6 - 16
20 Ridge profile for shed roof
21 Toothed flashing
22 Profile filler strips (fasten with silicone)
23 Permanently elastic precompressed strip seal, self-adhesive on one side, illmod SFI 30 x 6 - 16
24 Guttering support
25 Guttering
26 Guttering flashing
27 Hard fiber strip between guttering profiles
28 Guttering purlin
29 Spacer plate
30 End flashing
31 Ridge profile
32 Self-tapping screw 5.5 x 35 - E 22
33 Self-sealing screw 6.3 x ... - E 22
34 Self-tapping screw 5.5 x 25 - E 16
35 Ridge profile, inside
36 Tie bolt

Industrial guttering

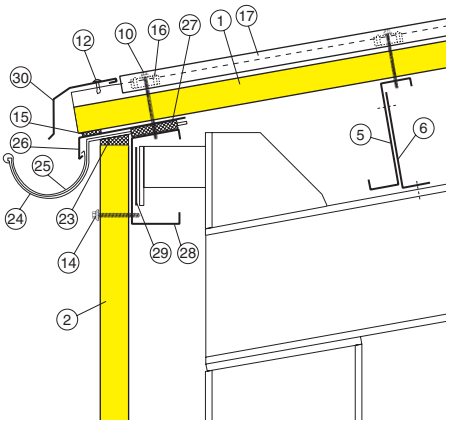

Ridge

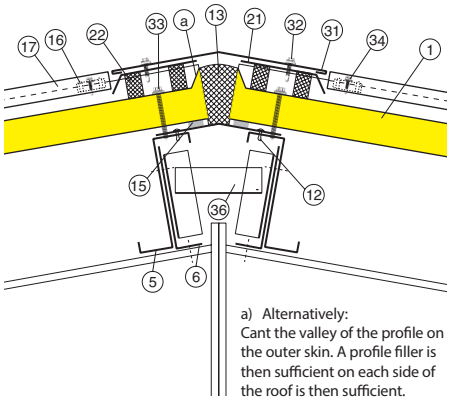

Mono-ridge

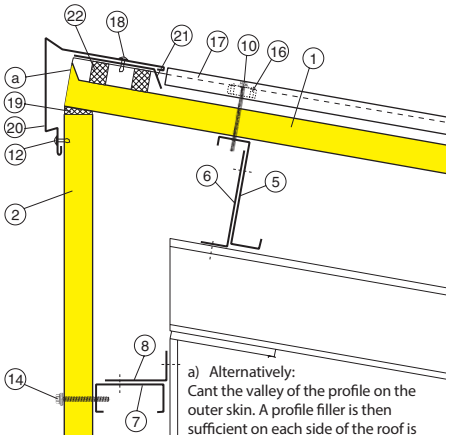

Gable verge

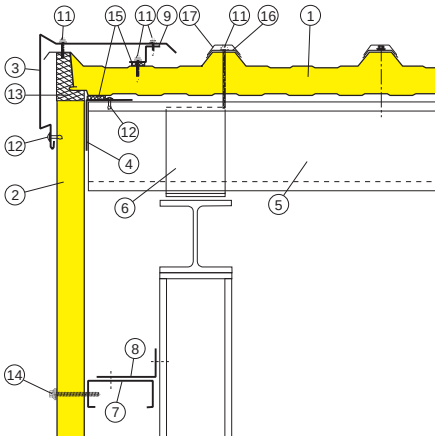

With spacer profile/overlapping

Industrial guttering

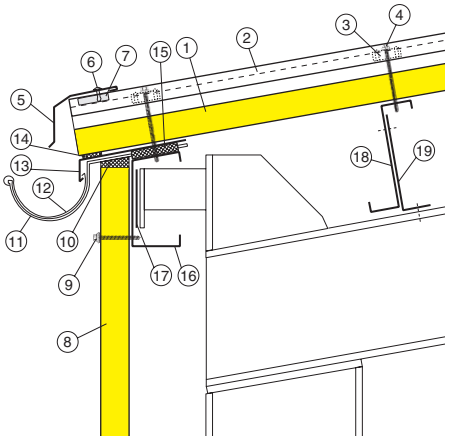

Ridge

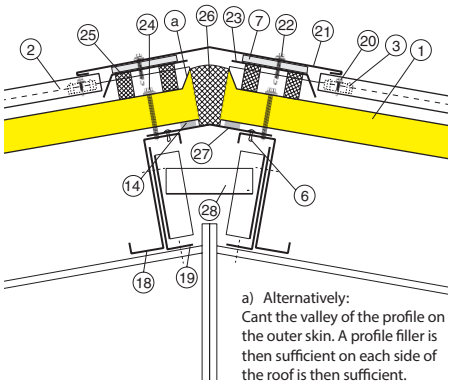

a) Alternatively:
Cant the valley of the profile on the outer skin. A profile filler is then sufficient on each side of the roof is then sufficient.

Mono-ridge

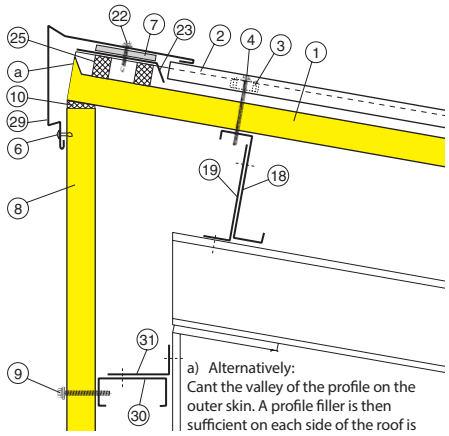

a) Alternatively:
Cant the valley of the profile on the outer skin. A profile filler is then sufficient on each side of the roof is

The possible non-binding solutions illustrated here have been designed in such a way that the connections are as cost-effective, easy to install, rainproof, airtight, visually attractive and durable as possible. The German regulation on energy saving in buildings and building systems (EnEV) states that the thermal bridge effects of connection details must be taken into consideration when calculating the U value.

1 FischerTHERM plusdach
2 Fischer plus rail
3 Spherical cap 41-50, aluminum-zinc coated
4 Self-sealing screw 6.3 x ... - E 16
5 End flashing, overlapping
6 Al/E blind rivet - Ø 4.8 x 8.3
7 EPDM spacer profile, self-adhesive 50 x 25 x 12 mm thick
8 FischerTHERM
9 Self-sealing screw 6.3 x ... - E 16
10 Permanently elastic precompressed strip seal, self-adhesive on one side, illmod SFI 30 x 6 - 16
11 Guttering support
12 Guttering
13 Guttering flashing
14 Permanently elastic strip seal, self-adhesive on one side, illac 20 x 4
15 Hard fiber strip between guttering profiles
16 Guttering purlin
17 Spacer plate
18 Purlin
19 Bracket
20 Self-tapping screw 5.5 x 25 - E 16
21 Ridge profile, overlapping
22 Self-tapping screw 5.5 x 35 - E 22
23 Toothed flashing
24 Self-sealing screw 6.3 x ... - E 22
25 Profile filler strips (fasten with silicone)
26 PUR-M assembly foam (dampen the ends of the elements)
27 Ridge profile, inside
28 Tie bolt
29 Shed roof ridge profile, overlapping
30 Rail
31 Bracket

FischerTHERM plusdach – the details

The possible non-binding solutions illustrated here have been designed in such a way that the connections are as cost-effective, easy to install, rainproof, airtight, visually attractive and durable as possible. The German regulation on energy saving in buildings and building systems (EnEV) states that the thermal bridge effects of connection details must be taken into consideration when calculating the U value.

1 FischerTHERM plusdach
2 Fischer plus rail
3 Spherical cap 41-50, aluminum-zinc coated
4 Connecting profile, special flashing
5 Z-profile
6 Self-tapping screw 5.5 x 25 - E 16
7 Permanently elastic strip seal, self-adhesive on one side, illac 20 x 4
8 Self-sealing screw 6.3 x ... - E 16
9 Self-sealing screw 6.3 x ... - E 22
10 Skylight frame, self-supporting, supplied by customer
11 Thermal insulation, supplied by customer
12 Permanently elastic precompressed strip seal, self-adhesive on one side, illmod SFI 30 x 6 - 16
13 Thermal insulation spread flat, supplied by customer
14 Purlin
15 Bracket
16 Self-tapping screw 5.5 x 25 - E 16
17 Connecting profile, special flashing
18 Toothed flashing
19 Profile filler strips (fasten with silicone)
20 Al/E blind rivet - Ø 4.8 x 8.3
21 Skylight frame, self-supporting, supplied by customer
22 PUR-M assembly foam (dampen the ends of the elements)
23 Ridge skylight

Skylight connection

(lengthwise to the roof element)

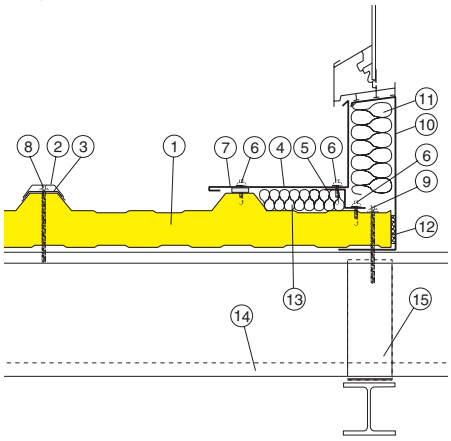

Skylight connection

(transversally to the roof element)

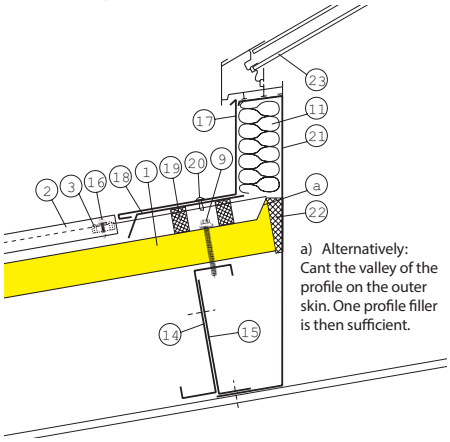

a) Alternatively: Cant the valley of the profile on the outer skin. One profile filler is then sufficient.

Longitudinal section

(Distancedistance between spherical caps)

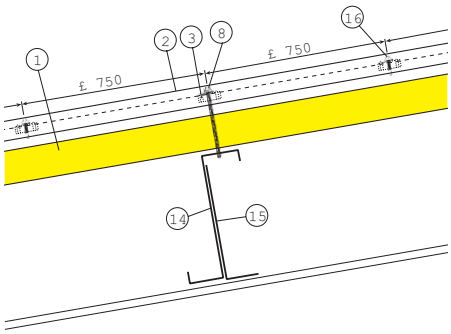

Overlapping

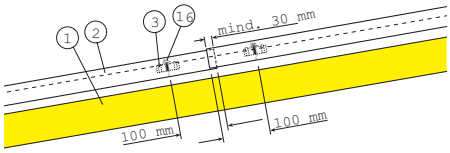

Butt joint

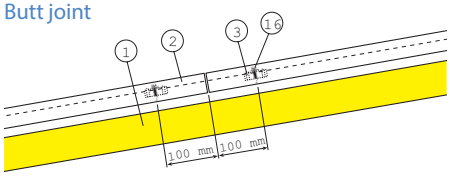

Skylight dome connection

(eaves)

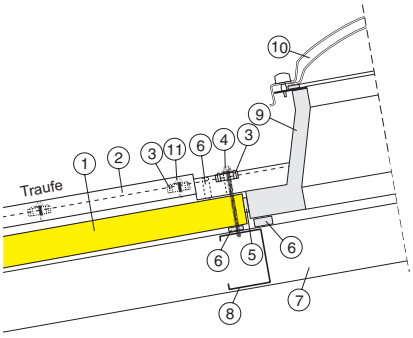

Skylight dome connection

(ridge)

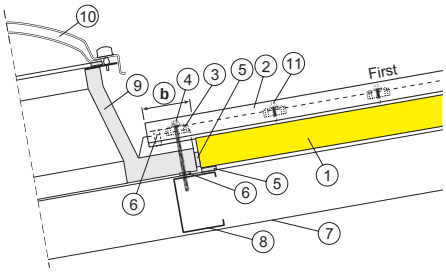

ⓑ = foam-free area

Skylight dome connection

(lengthwise to the roof element)

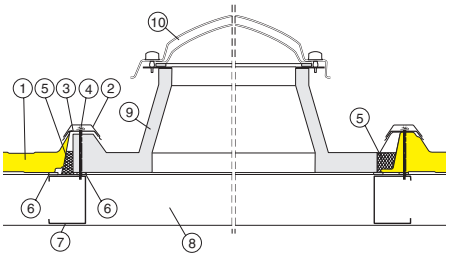

The possible non-binding solutions illustrated here have been designed in such a way that the connections are as cost-effective, easy to install, rainproof, airtight, visually attractive and durable as possible. The German regulation on energy saving in buildings and building systems (EnEV) states that the thermal bridge effects of connection details must be taken into consideration when calculating the U value.

1 FischerTHERM plusdach
2 Fischer plus rail
3 Spherical cap 41-50, aluminum-zinc coated
4 Self-sealing screw 6.3 x ... - E 16
5 Permanently elastic precompressed strip seal, self-adhesive on one side, illmod SFI 30 x 6 - 16
6 Permanently elastic strip seal, self-adhesive on one side, illac 20 x 4
7 Rail, lengthwise
8 Rail, transverse
9 Skylight dome connector
10 Skylight dome
11 Self-tapping screw 5.5 x 25 - E 16

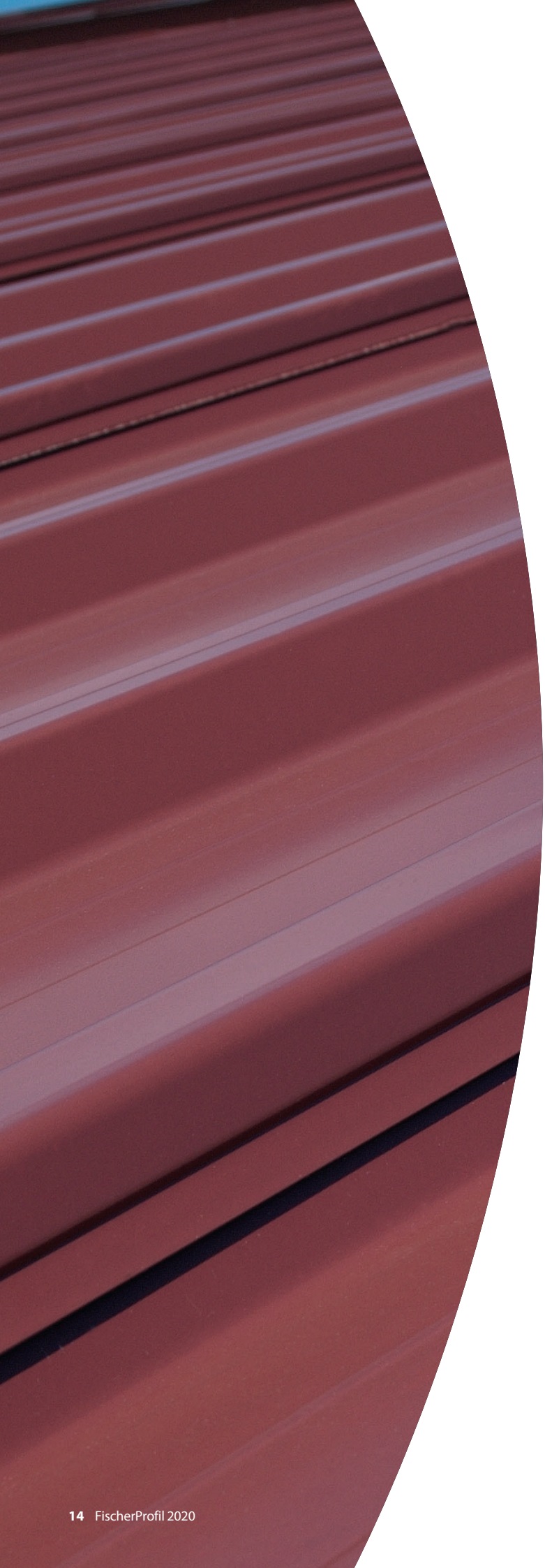

Local shopping center, Langenselbold

Coating:

25 µm RAL 8012

FischerTHERM plusdach

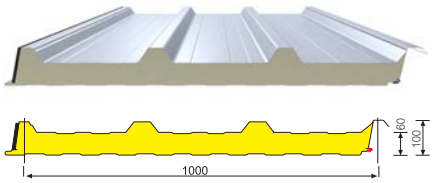

www.fischerprofil.de

Fischer Profil GmbH
A Tata Steel Enterprise

Fischer Profil GmbH
Waldstraße 67
57250 Netphen-Deuz
Germany

T +49 (0) 2737 508-0
F +49 (0) 2737 508-118
E info@fischerprofil.de

Fischer Profil GmbH, registered in Germany, Siegen district court HRB 3038.
Company headquarters: Waldstraße 67, 57250 Netphen-Deuz, Germany

English 09.2020